FLOW MEASUREMENT

MEG 222 Week 11 Lecture

Lecture Learning Outcomes

At the end of this lecture, you will be able to practically apply the Bernoulli's equation in measuring the rate of flow of an incompressible fluid through a pipe using,

- Venturimeter
- Orifice meter
- Pitot tube

Venturimeter

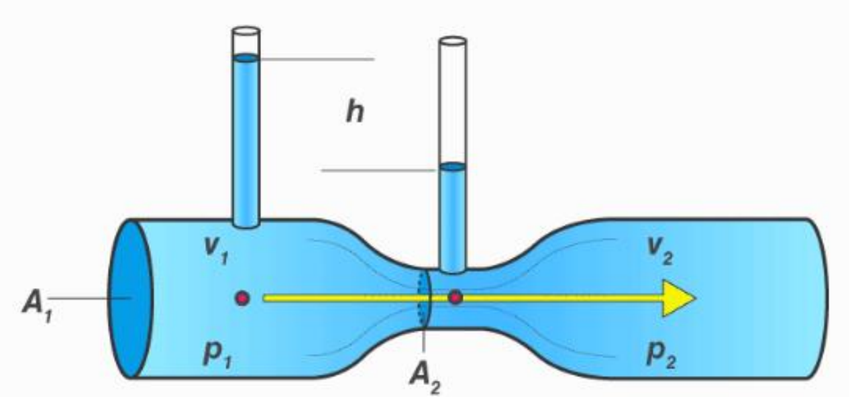

Fig. 1: Venturimeter

- It is a commonly used device in water, pharmaceutical, chemical, oil and gas industries. The device has the objective of measuring the flow rate of fluid inside a pipe.

- It consists of a short converging part, throat and the diverging part

- It's operation is based on the principle of the Bernoulli's equation

- Looking at sections 1 and 2, the equation is written as

$$\frac{p_1}{\rho g} + \frac{{v_1}^2}{2g} + z_1 = \frac{p_2}{\rho g} + \frac{{v_2}^2}{2g} + z_2$$

Venturimeter

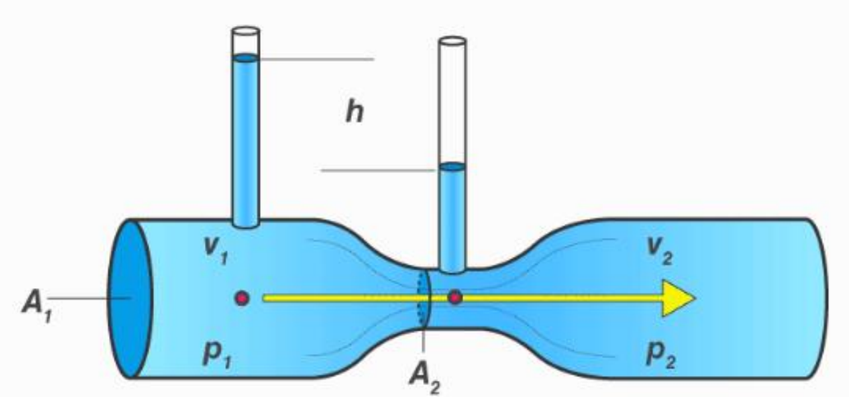

Fig. 1: Venturimeter

- If the pipe is horizontal, $z_1 = z_2$. Therefore, the equation becomes

$$\frac{p_1}{\rho g} + \frac{{v_1}^2}{2g} = \frac{p_2}{\rho g} + \frac{{v_2}^2}{2g}$$

Which can also be re-written as

$$\frac{p_1}{\rho g} - \frac{p_2}{\rho g} = \frac{{v_2}^2}{2g} - \frac{{v_1}^2}{2g}$$

The difference in the pressure head is written as

$$h = \frac{p_1 - p_2}{\rho g}$$

Venturimeter

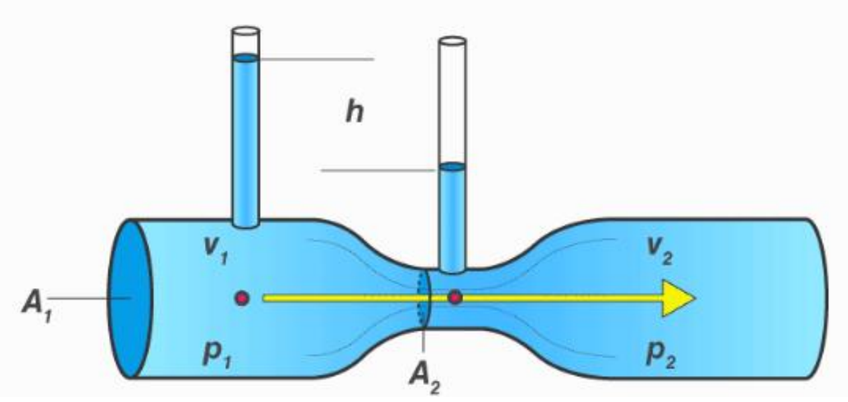

Fig. 1: Venturimeter

Now let's apply the continuity equation to the sections

$$a_1 v_1 = a_2 v_2$$

$$v_1 = \frac{a_2 v_2}{a_1}$$

Substitute the expression above into the Bernoulli equation

$$h = \frac{{v_2}^2}{2g} - \frac{\left(\frac{a_2 v_2}{a_1}\right)^2}{2g} = \frac{{v_2}^2}{2g}\left[1 - \frac{{a_2}^2}{{a_1}^2}\right]$$

Or

$$v_2 = \frac{a_1}{\sqrt{{a_1}^2 - {a_2}^2}}\sqrt{2gh}$$

Venturimeter

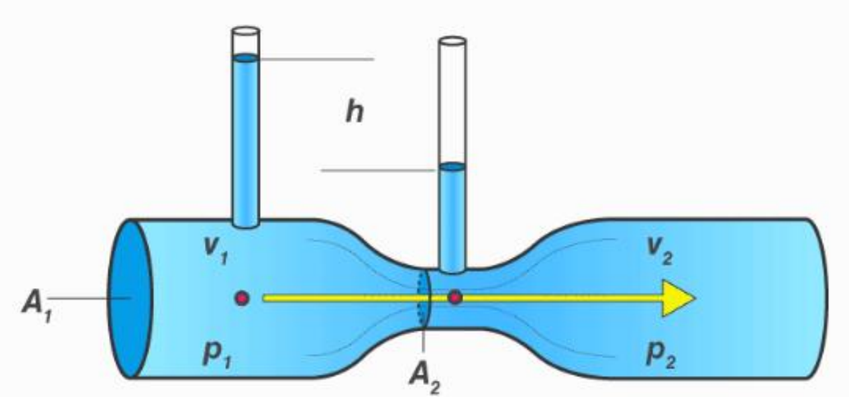

Fig. 1: Venturimeter

The theoretical discharge based on ideal conditions can now be obtained from

$$Q = \frac{a_1 a_2}{\sqrt{{a_1}^2 - {a_2}^2}} \sqrt{2gh}$$

The actual discharge will be less than the theoretical discharge so we multiply by a factor called the coefficient of the venturimeter C_d which is less than 1

$$Q_{act} = C_d \times \frac{a_1 a_2}{\sqrt{{a_1}^2 - {a_2}^2}} \sqrt{2gh}$$

Venturimeter

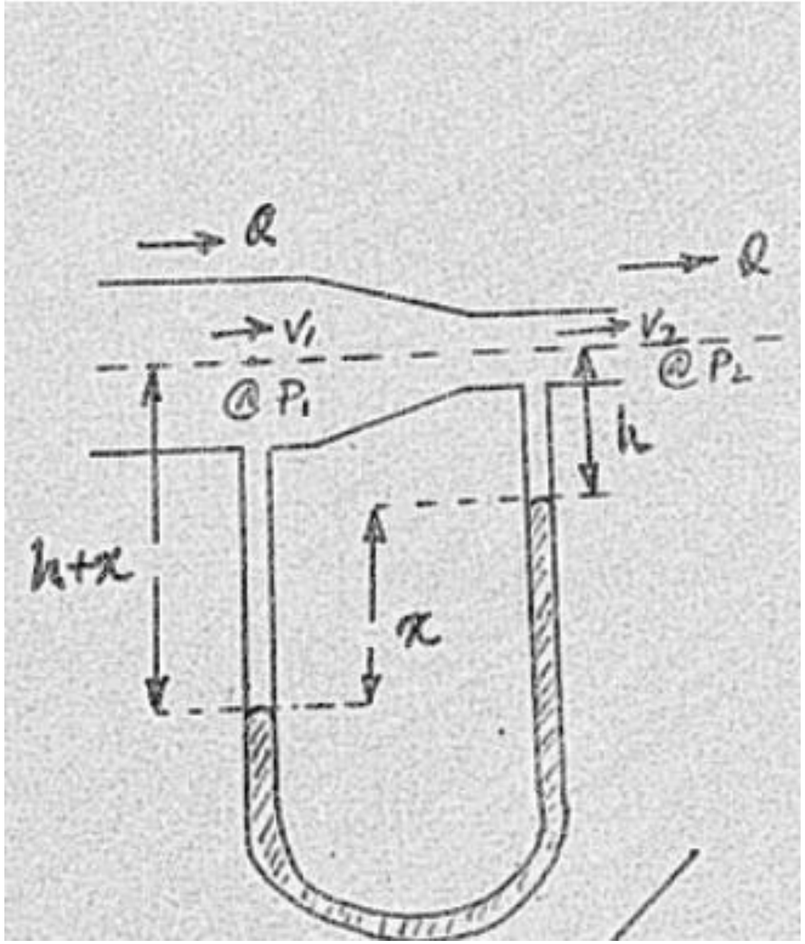

Fig. 2: Differential manometer and venturimeter with different liquids

1. Liquid in U-tube differential manometer is heavier than liquid flowing through the pipe

$$h = x\left[\frac{SG_h}{SG_l} - 1\right]$$

2. Liquid in U-tube differential manometer is lighter than liquid flowing through the pipe

$$h = x\left[1 - \frac{SG_l}{SG_h}\right]$$

Venturimeter

3. Liquid in inclined U-tube differential manometer is heavier than liquid flowing through the pipe

$$h = \left(\frac{p_1}{\rho g} + z_1\right) - \left(\frac{p_2}{\rho g} + z_2\right) = x\left[\frac{SG_h}{SG_l} - 1\right]$$

4. Liquid in inclined U-tube differential manometer is lighter than liquid flowing through the pipe

$$h = \left(\frac{p_1}{\rho g} + z_1\right) - \left(\frac{p_2}{\rho g} + z_2\right) = x\left[1 - \frac{SG_l}{SG_h}\right]$$

Note that h is the pressure head by virtue of the difference in height in the venturimeter while x is the difference in height of the manometric liquid

Venturimeter: Simple Class Exercises

1. An oil of specific gravity of 0.8 is flowing through a venturimeter having inlet diameter 20 cm and throat diameter 10 cm. The oil-mercury differential manometer shows a reading of 25 cm. Calculate the discharge of oil through the horizontal venturimeter. Take $C_d = 0.98$.

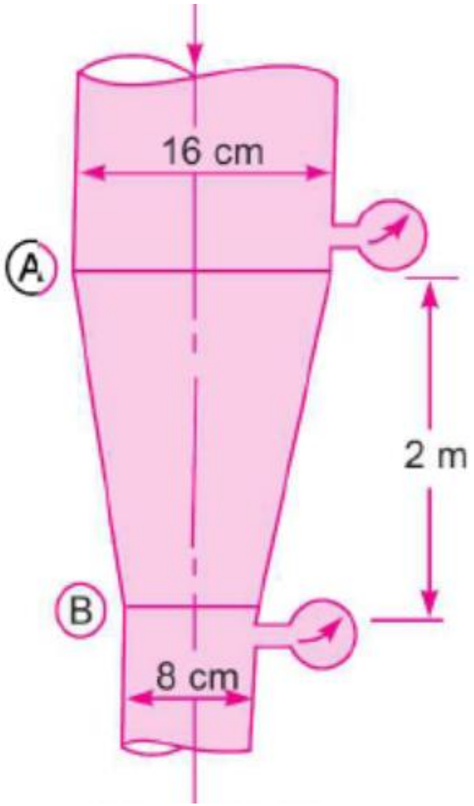

2. In a vertical pipe conveying oil of specific gravity 0.8, two pressure gauges are installed at A and B where the diameters are 16cm and 8cm respectively. Section A is 2m above section B. The pressure gauge readings show that pressure at B is greater than at A by 0.981N/cm^2. Neglecting all losses, calculate the flow rate.

Venturimeter: Practice Exercise

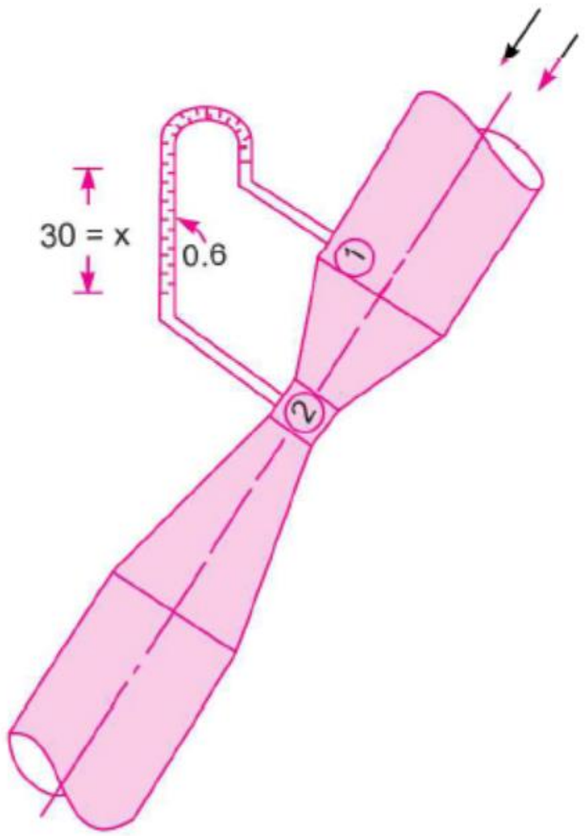

Find the discharge of water flowing through a pipe 30cm diameter placed in an inclined position where a venturimeter is inserted, having a throat diameter of 15cm. The difference of pressure between the main and throat is measured by a liquid of specific gravity 0.6 in an inverted U-tube which gives a reading of 30cm. Also, the loss of head between the main and throat is 0.2 times the kinetic head of the pipe

Orifice Meter

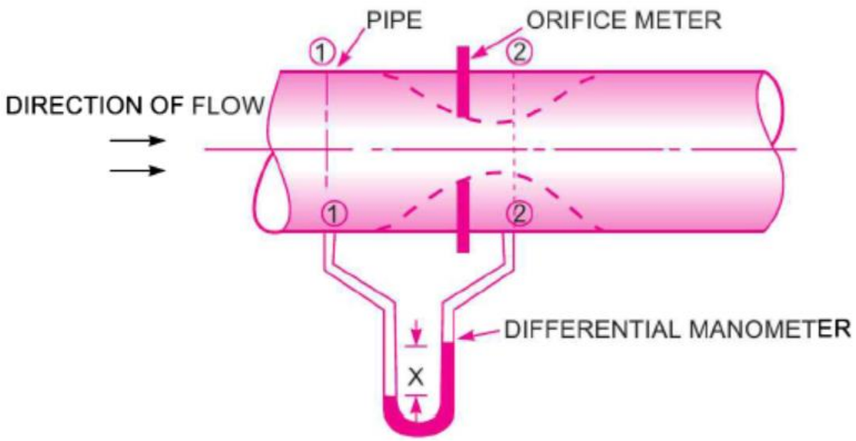

Fig. 3: Orifice meter

- It is also used to measure the rate of flow of a fluid through a pipe but cheaper than a venturimeter.
- It consists of a flat circular plate which has a circular sharp edged hole called orifice which is concentric with the pipe
- The orifice diameter is kept generally 0.5 times the diameter of the pipe
- Sometimes the orifice diameter can vary from 0.4 to 0.8 times the pipe diameter

Orifice Meter

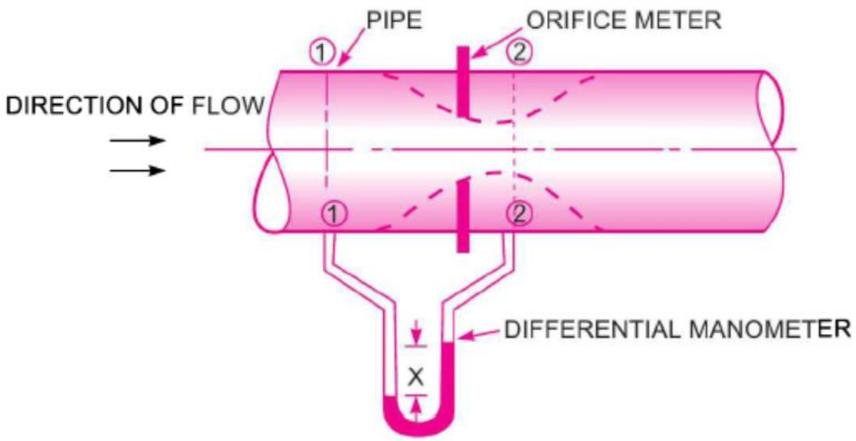

Fig. 3: Orifice meter

- **Looking at sections 1 and 2, the equation is written as**

$$\frac{p_1}{\rho g} + \frac{{v_1}^2}{2g} + z_1 = \frac{p_2}{\rho g} + \frac{{v_2}^2}{2g} + z_2$$

$$\left(\frac{p_1}{\rho g} + z_1\right) - \left(\frac{p_2}{\rho g} + z_2\right) = \frac{{v_2}^2}{2g} - \frac{{v_1}^2}{2g} = h$$

$$v_2 = \sqrt{2gh + {v_1}^2}$$

The ratio of the area of the vena-contracta (section 2) to the area of the orifice is coefficient of the contraction

$$C_c = \frac{a_2}{a_0}$$

Orifice Meter

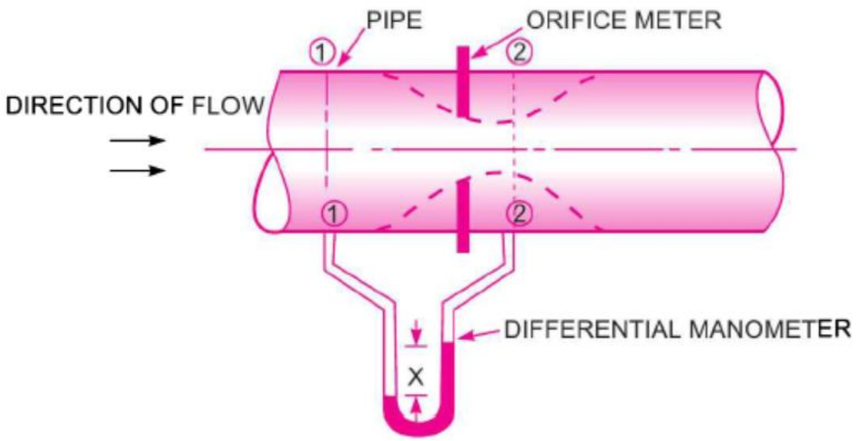

Fig. 3: Orifice meter

- **From the continuity equation**

$$v_1 = \frac{a_0 C_c}{a_1} v_2$$

Therefore,

$$v_2 = \sqrt{2gh + {v_1}^2} = \sqrt{2gh + \left(\frac{a_0 C_c}{a_1} v_2\right)^2} = \frac{\sqrt{2gh}}{\sqrt{1 - \left(\frac{a_0}{a_1}\right)^2 {C_c}^2}}$$

Orifice Meter

The discharge is obtained as

$$Q = a_2 v_2 = \frac{a_0 C_c \sqrt{2gh}}{\sqrt{1 - \left(\frac{a_0}{a_1}\right)^2 {C_c}^2}}$$

Which can be rewritten as

$$Q = C_d \frac{a_0 a_1}{\sqrt{{a_1}^2 - {a_0}^2}} \times \sqrt{2gh}$$

Where C_d is the coefficient of discharge given by

$$C_d = \frac{C_c \sqrt{1 - \left(\frac{a_0}{a_1}\right)^2}}{\sqrt{1 - \left(\frac{a_0}{a_1}\right)^2 {C_c}^2}}$$

Orifice Meter: Simple Class Exercises

1. An orifice meter with orifice diameter of 10cm is inserted in a pipe of 20cm diameter. The pressure gauges fitted upstream and downstream of the orifice meter give readings of 19.62N/cm^2 and 9.81N/cm^2 respectively. Coefficient of discharge for the orifice meter is 0.6. Determine the discharge of water through the pipe.

2. An orifice meter with orifice diameter of 15 cm is inserted in a pipe of 30cm diameter. The pressure difference measured by a mercury-oil differential manometer on the two sides of the orifice meter gives a reading of 50cm of mercury. What is the rate of flow of oil of specific gravity 0.9 through the pipe when the coefficient of discharge of the orifice meter is 0.64

Pitot Tube

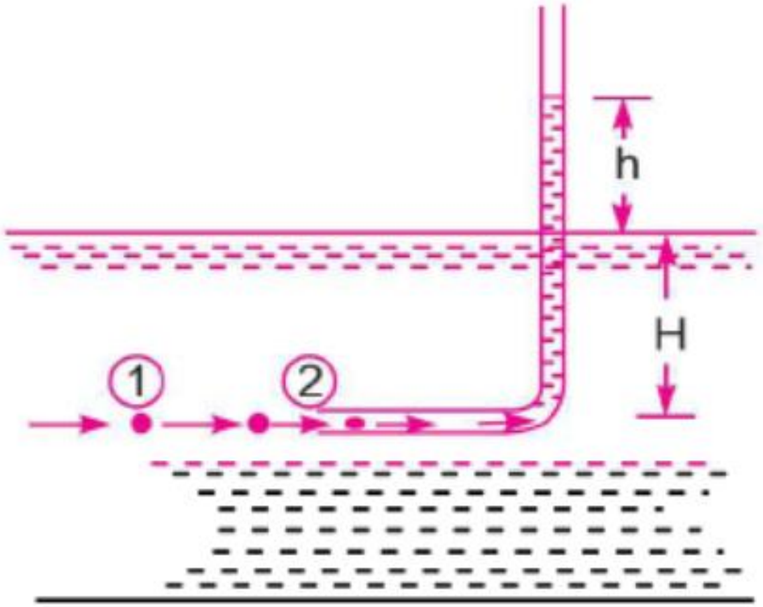

Fig. 4: Pitot tube

- It is used for measuring the velocity of flow at any point in a pipe or channel
- It is based on the principle of conversion of kinetic energy to pressure energy i.e. if velocity at a point in a flow become zero, the pressure at that point is increased
- In the figure, the liquid in the tube rises due to the conversion of kinetic energy to pressure energy
- The velocity of the flow is determined by measuring the rise of the liquid in the tube

Pitot Tube

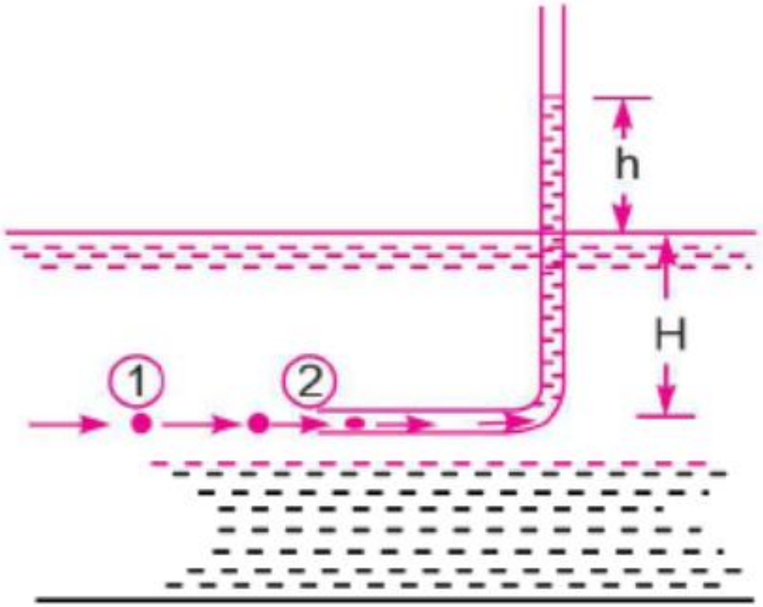

Fig. 4: Pitot tube

- **Using the Bernoulli equation**

$$\frac{p_1}{\rho g} + \frac{{v_1}^2}{2g} + z_1 = \frac{p_2}{\rho g} + \frac{{v_2}^2}{2g} + z_2$$

Points 1 and 2 are on the same line. Therefore, $z_1 = z_2$

Pressure head at 1 is

$$H = \frac{p_1}{\rho g}$$

Pressure head at 2 is

$$H + h = \frac{p_2}{\rho g}$$

$$H + \frac{{v_1}^2}{2g} = H + h$$

Pitot Tube

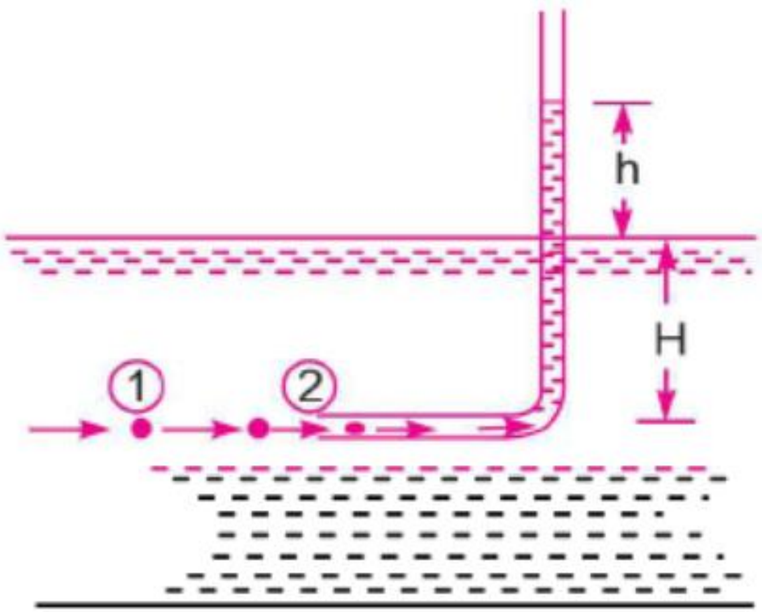

Fig. 4: Pitot tube

- The theoretical velocity can now be obtained from the equation

$$v_1 = \sqrt{2gh}$$

The actual velocity is given by

$$v_{1,act} = C_v\sqrt{2gh}$$

Where C_v is the coefficient of the pitot tube

Class Exercise: Find the velocity of flow of an oil through a pipe, when the difference of mercury level in a differential U-tube manometer connected to the two of the pitot-tube is 100mm and $C_v = 0.98$. Take the specific gravity of the oil as 0.8

SUMMARY

1. Venturimeter
2. Orifice meter
3. Pitot-tube
4. Worked Examples
5. Practice Problems

End of MEG 222 Lectures